CONFINED SPACES

in

SC B&CB Facilities

Revised as of
Aug 2006

Pictorial Directory & Hazard Analysis of

CONFINED SPACES

in SC B&CB Buildings

(in Alphabetical Order **A - E** by Building Name / System)

Gas Monitor
REQUIRED
To Take Continuous Atmospheric Readings For ALL Confined Spaces

Permit Required Confined Spaces

REQUIRE ENTRY PERMIT From Your Supervisor

Questions: Call
Bernie Lee, Safety
737-2315

AIR HANDLERS

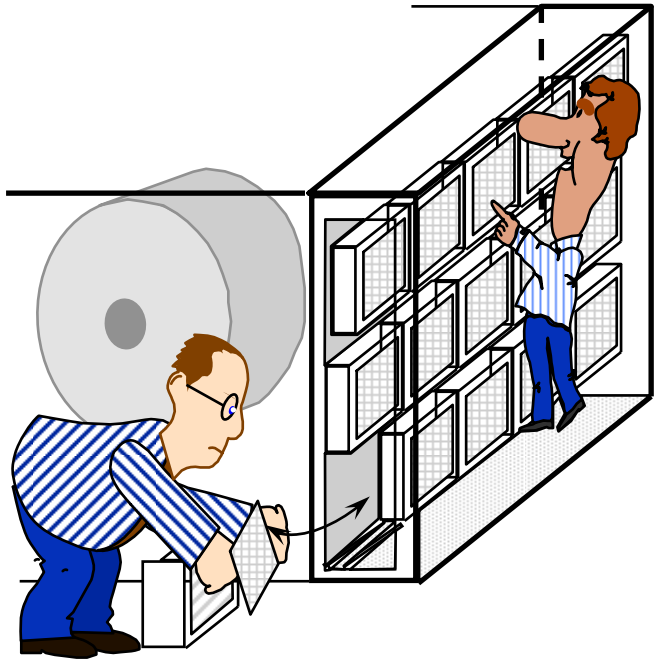

Columbia Mills

AH-24

(Push through filters)

Some air handlers require bodily entry to change out filters. Some meet the confined space criteria but

NONE are
Permit Required Confined Spaces.

AIR HANDLERS: Confined Space Permit - Not Required

LOCATION	AIR HANDLER	TYPE	
Agriculture Laboratory	B-49 AH-1 & 2	6’ x 18” Access Door	
Blatt	B-53 AH-1 & 2	6’ x 18” Access Door	
Blatt	B-53 AH-MAIN	4’ x 2’ Access Door	
Brown	B-41 AH- MAIN	4’ x 16” Access Door	
Hayne Laboratory	B-47 AH-MAIN	4’ x 2’ Access Door	
Hayne Laboratory	B-47 Fresh Air Makeup 1 & 2	Access Door	
David	B-3 AH-1 & 2	4’ x 2’ Access Door	
Five Points	B-41 AH- MAIN	Access Door	
Gressette	B-54 AH-Main	4’ x 16” Access Door	
Rutledge	B-7 AH-Main (PH)	6’ x 3’ Walk-In Door	
Columbia Mills	B-44 (14 AHUs)	Access Door / Walk-In Door	
Statehouse			

All other buildings have air handlers that have push-through/pull out filters, exterior filters, or filters that do not require entry. Specific unit information is available from the FM Energy-Environmental Team.

ARCHIVES & HISTORY CENTER

Bldg 113898, 8301 Parklane Road

BACKFLOW PREVENTER PIT

PERMIT REQUIRED CONFINED SPACE

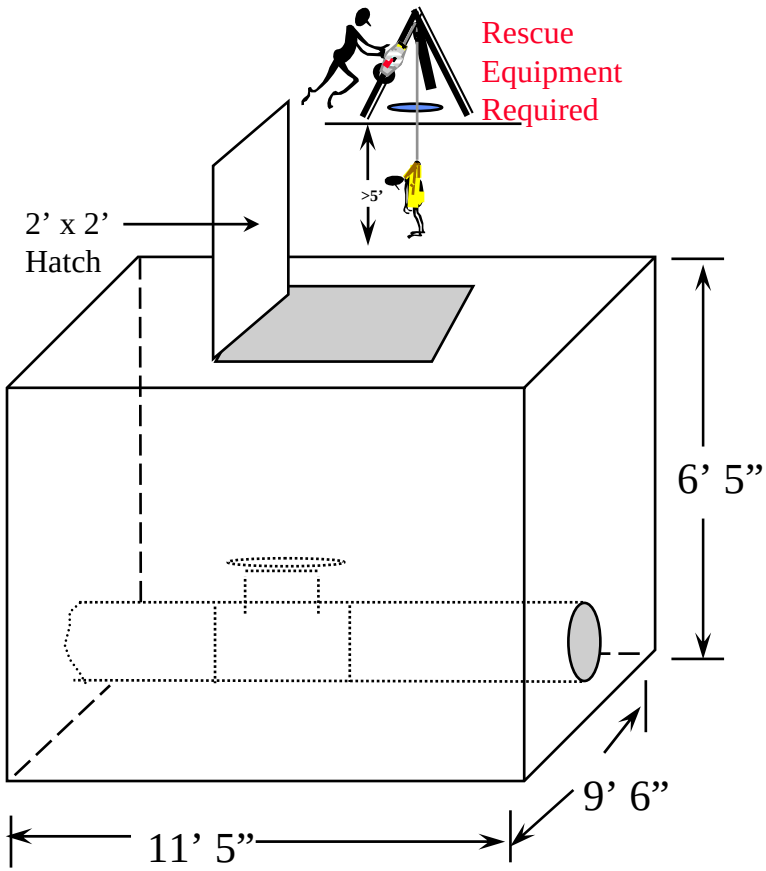

Located on North side of Energy Facility next to Emergency Generator & Fuel Oil Tank

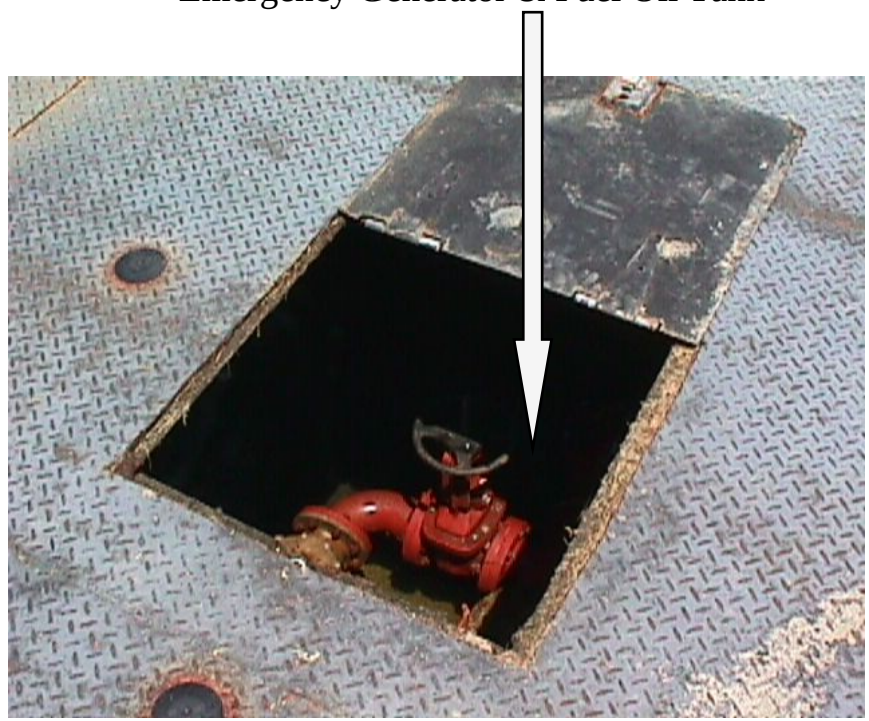

BLATT BUILDING

Bldg. 100302, 1105 Pendleton St.

Two (2) Roof Drain Manholes

Located on the terrazzo level at and near the Southwest corner of Bldg. near intersection of Pendleton and Assembly Streets

PERMIT REQUIRED CONFINED SPACE

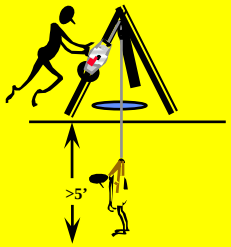

Rescue Equipment Required

General Services Employees are <u>NOT</u> to enter these spaces

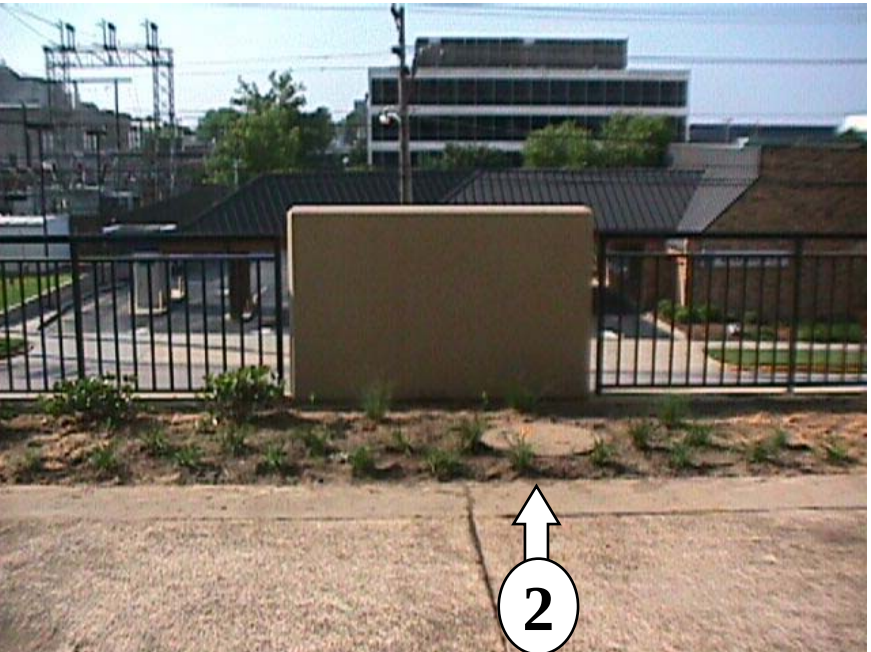

LARGE BOILERS:

When the Boiler is OFF, Cooled and Both Ends are Opened it is NOT a Confined Space

Entrance made any other way, i.e., through an Inspection Door, is a

PERMIT REQUIRED CONFINED SPACE

Procedures to include Atmospheric samples taken prior to and during entire entry to any boiler chamber

LOCATIONS:

- COLUMBIA MILLS, Energy Facility (2)
- FM ENERGY FACILITY (2)
- HAYNE LABORATORY, Basement (2)
- RUTLEDGE, Penthouse (1)

as of: August 2005

LARGE BOILERS

Columbia Mills Energy Facility

MEDIUM BOILERS are smaller in size but one can still bodily enter by crawling:

- Agriculture Lab (1)
- Archives & History (2)
- Arts Commission (1)
- Blind Commission, Bldg C (1)
- Mills-Jarrett (2)
- Senate St – OHR (1)
- Sims-Aycock (2)
- State Library (1)

Enter Boiler =
PERMIT REQUIRED CONFINED SPACE

•**SMALL BOILERS** are small enough they can't be bodily entered so are

Not Confined Spaces

•FM CUSTODIAL BLDG
(Basement)
Bldg 113900, 927 Main St

•SENATE ST. BLDG
(Basement)
Bldg 100411, 1430 Senate St

•GOVERNOR'S MANSION
(Basement)
Bldg 100314, 800 Richland St

•JOB SERVICE (1st Floor East Wing Mechanical Room)
Bldg 100437, 701 Hampton St

CONFINED SPACES SURVEY

Job Safety Analysis Worksheet

State Complex/Energy Facility

Title of Job/Operation **Boilers** (2) Date 10/95, 10/96, 6/03 No. _____

Position/Title(s) of Person(s) Who Do Job _____ Name of Employee Observed _____

Analysis Made By Bernie Lee

Department Building Systems

Section Facilities Management Analysis Approved by Confined Space Committee

Sequence of Basic Job Steps	Potential Accidents or Hazards	Recommended Safe Job Procedures
1. Prepare to enter	E- Heat	Turn off boiler, let cool
	SB/SA- Equipment	Use LOTO to relieve pressure prior to
		opening rear
	E- Fiberglass thermal insulation	PPE- particulate filter face mask; gloves,
	between inner & outer chamber walls	head-to-toe coveralls, boot covers
2. Enter boiler chamber (external	E- Carbon deposit, gas, oil	Use LOTO prior to entering; open all ports
measurements 16’ x 7’ 8”)		for ventilation; take air samples prior &
		during entry
	FS	Wear appropriate footwear & use caution
3. Exiting	FS	Wear appropriate footwear & use caution
	SA- Equipment	Be aware of location

Struck By (SB)
Struck Against (SA)
Contacted By (CB)
Contact With (CW)

Caught On (CO)
Caught In (CI)
Caught Between (CBT)
Fall to Same Level (FS)

Fall to Below (FB)
Overexertion (OE)
Exposure (E)

CONFINED SPACES SURVEY

Job Safety Analysis Worksheet

Columbia Mill/Energy Facility

Title of Job/Operation Boilers (2) Date 9/96 & 6/03 No. _____

Position/Title(s) of Person(s) Who Do Job _____ Name of Employee Observed _____

_____ Analysis Made By Bernie Lee

Department Building Systems

Section Facilities Management Analysis Approved by Confined Space Committee

Sequence of Basic Job Steps	Potential Accidents or Hazards	Recommended Safe Job Procedures
1. Prepare to enter	E- Heat	Turn off boiler, let cool
	SB/SA- Equipment	Use LOTO to relieve pressure prior to
		opening rear
2. Enter boiler chamber (external	E- Carbon deposit, gas, oil	Use LOTO prior to entering; open all ports
measurements 16’ x 7’ 8”)		for ventilation; take air samples prior &
		during entry
	FS	Wear appropriate footwear & use caution
3. Exiting	FS	Wear appropriate footwear & use caution
	SA- Equipment	Be aware of location

Struck By (SB)
Struck Against (SA)
Contacted By (CB)
Contact With (CW)

Caught On (CO)
Caught In (CI)
Caught Between (CBT)
Fall to Same Level (FS)

Fall to Below (FB)
Overexertion (OE)
Exposure (E)

CONFINED SPACES SURVEY

Job Safety Analysis Worksheet

Title of Job/Operation 927 S. Main St (Basement) Boiler Date 9/96 & 6/03 No. _____

Position/Title(s) of Person(s) Who Do Job _____ Name of Employee Observed _____

_____ Analysis Made By Bernie Lee

Department Building Systems

Section Facilities Management Analysis Approved by Confined Space Committee

Sequence of Basic Job Steps	Potential Accidents or Hazards	Recommended Safe Job Procedures
1. Open up boiler	E- Heat	Turn off boiler, let cool
	E- Fiberglass thermal insulation	PPE- particulate filter face mask; gloves,
	between inner & outer chamber walls	head-to-toe coveralls, boot covers
	SA- Pipes/Equipment	Use LOTO & relieve pressure
	FS; FB- When pit grate removed	Wear slip resistant soled shoes; Use caution
2. Conduct Work	E-Thermal; gas/oil	Use LOTO, allow to cool, and take air
		samples prior to work; use gloves, apron
		and possibly face mask and dust filter
Note: Not capable	of bodily entry	

Struck By (SB)
Struck Against (SA)
Contacted By (CB)
Contact With (CW)

Caught On (CO)
Caught In (CI)
Caught Between (CBT)
Fall to Same Level (FS)

Fall to Below (FB)
Overexertion (OE)
Exposure (E)

COOLING TOWERS
Non-Permit Confined Spaces

LOCATIONS:

- Archives & History (2)
- Arts Commission (1)
- Columbia Mill (2)
- David (1)
- Five Points (1)
- FM Energy Facility (4)
- Gressette-Collins (2)
- Harper ESC Annex (1)
- Hayne DHEC Lab (1)
- North Towers/DSS (2)
- Rutledge (1)
- Senate St-OHR (1)
- Sims-Aycock (2)
- State Library (1)

FM Energy Facility - ROOF

Water And Sludge Accumulate On Floor And Have To Be Cleaned. Some Floors Are Flat And Others Are Up To 45 Degrees Causing A Slipping And Possible Entrapment Hazard.

Archives & History

• DEAERATOR TANKS = PERMIT REQUIRED CONFINED SPACES

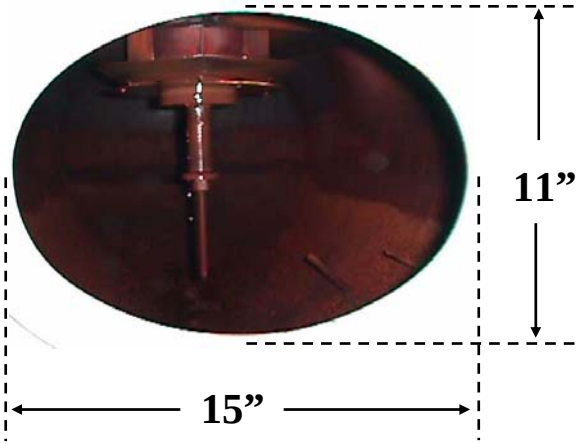

ENTRY PORTAL

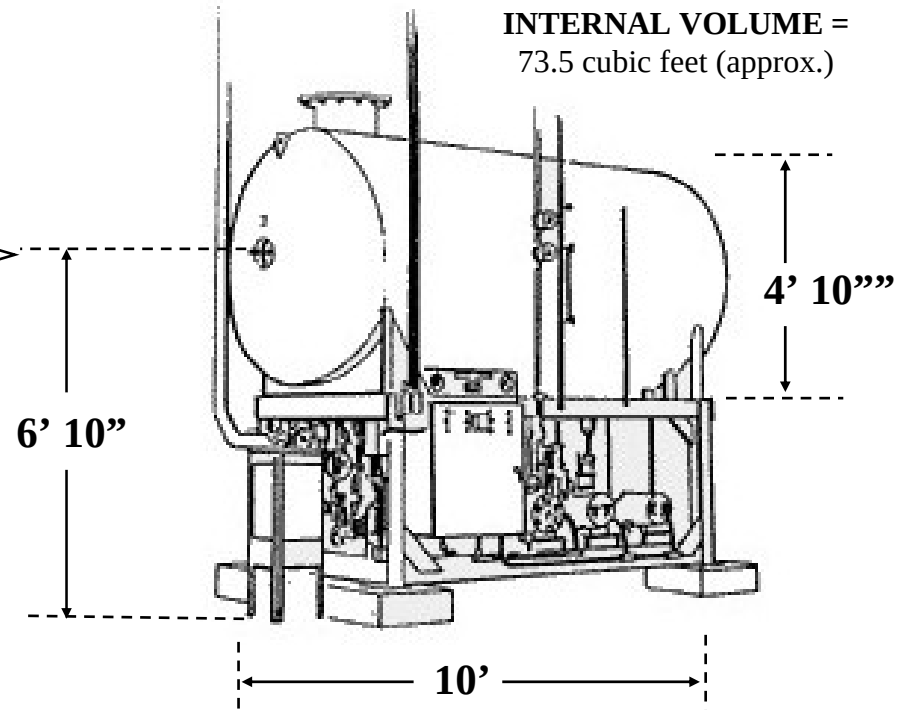

FM ENERGY FACILITY, Bldg 100410, 1121 College St

Also at COLUMBIA MILLS - ENERGY FACILITY, Bldg 110708, 301 Gervais St

• DEAERATOR TANKS = PERMIT REQUIRED CONFINED SPACES

Overhead Steam Lines

1) Gate Valve to Reducing Station

2) Bypass Gate Valve

Overhead Condensate Valve

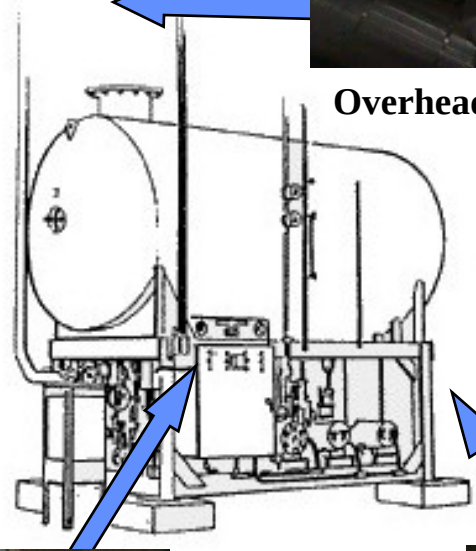

Use Gate Valve Lockouts or Chain, and Lock with Tag on 1, 2 & 3

Electric – Turn Off & Use Lock and Tag

Makeup Water Valve

CONFINED SPACES SURVEY

Job Safety Analysis Worksheet

State Complex/Energy Facility

Title of Job/Operation Inspect/Maintain **Deaerator Tank** Date 8/2005 No. _____

Position/Title(s) of Person(s) Who Do Job _____ Name of Employee Observed Ronnie Taylor

_____ Analysis Made By Bernie Lee & Aaron Redmond

Department Energy-Environmental

Section Facilities Management Analysis Approved by _____

Sequence of Basic Job Steps	Potential Accidents or Hazards	Recommended Safe Job Procedures
1. Prepare to enter	1A. Electrical, Steam, Water (CW)	1A. Drain Tank; Apply LOTO (see diagram)
	1B. Awkward body position for entry (OE)	1B. Erect scaffold; use ladder to climb onto scaffold
	1C. Caustic Chemical for boiler water treatment (CW)	1C. MSD Sheets - PPE; Thoroughly rinse inside of tank with water; air sampling
	1D. Hot tank (CW)	1D. Allow tank to cool to the touch
	1E. Lack of Oxygen (E)	1E. Mechanical ventilation; air sampling
	1F. Confined Space with IDLH	1F. Permit required
2. Enter/Work in deaerator	2A. Noise (E)	2A. Wear Hearing Protection
	2B. Lack of Oxygen (E)	2B. Mechanical ventilation; continuous air sampling
	2C. Slag, fumes from welding	2C. Hot Work Permit; PPE (welding goggles, face shield, gloves); fire extinguisher; continuous air sampling; mechanical ventilation
3. Exit	3. Hatch size restricts exit	3. Permit Required Confined Space; Attendant; Rescue equipment (wristlets & lanyard)

Struck By (SB)
Struck Against (SA)
Contacted By (CB)
Contact With (CW)

Caught On (CO)
Caught In (CI)
Caught Between (CBT)
Fall to Same Level (FS)

Fall to Below (FB)
Overexertion (OE)
Exposure (E)

BROWN BUILDING

Bldg. 100303, 1205 Pendleton St.

BACKFLOW PREVENTER PIT

Located on Northeast corner of Bldg. near intersection of Pendleton and Sumter Streets

PERMIT REQUIRED CONFINED SPACE

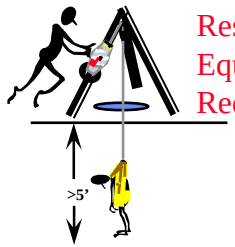

Rescue Equipment Required

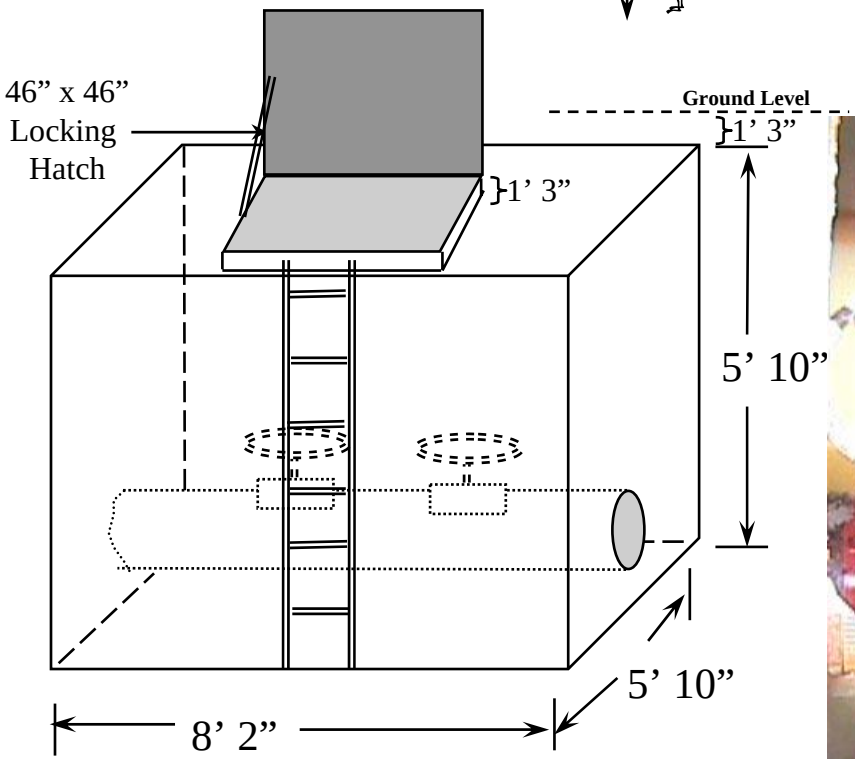

as of: June 2003
SC GSD Safety

CONFINED SPACES SURVEY

Job Safety Analysis Worksheet

BROWN Bldg

Title of Job/Operation **Backflow Preventor Pit** Date 6/20/03 No. _____

Position/Title(s) of Person(s) Who Do Job _____ Name of Employee Observed _____

_____ Analysis Made By Bernie Lee

Department FM Bldg. Maintenance (Center)

Section Facilities Management Analysis Approved by Confined Space Committee

Sequence of Basic Job Steps	Potential Accidents or Hazards	Recommended Safe Job Procedures
1. Enter work space	FB- 7’	Install steps
	SB - Hatch/Ladder is Restricted Entry	Permit Required; hard hat
	E - Hazardous Atmosphere	Use Multi-Gas Monitor to ensure safety
2. Conduct work	SA- Equipment	Wear gloves, hard hat & safety eyewear
	CW- Flood water	Use LOTO prior to entry; pump out excess
		water
	CW- Electrical	Use LOTO prior to entry
	FS- Slip/Trip	Wear work boots
	E - Hazardous Atmosphere	Use Multi-Gas Monitor for entire entry
3. Exiting	FB- 7’	Use steps

Struck By (SB)
Struck Against (SA)
Contacted By (CB)
Contact With (CW)

Caught On (CO)
Caught In (CI)
Caught Between (CBT)
Fall to Same Level (FS)

Fall to Below (FB)
Overexertion (OE)
Exposure (E)

COLUMBIA MILLS, ENERGY FACILITY

Bldg110708, 301 Gervais St

BACKFLOW PREVENTER PITS

PERMIT REQUIRED

CONFINED SPACES

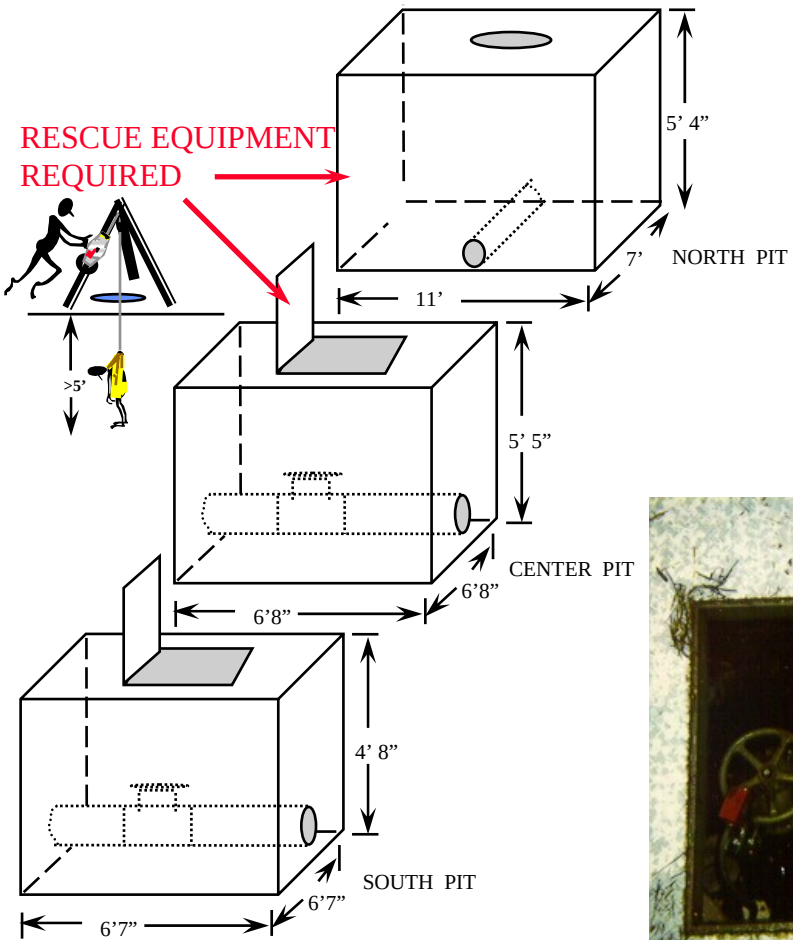

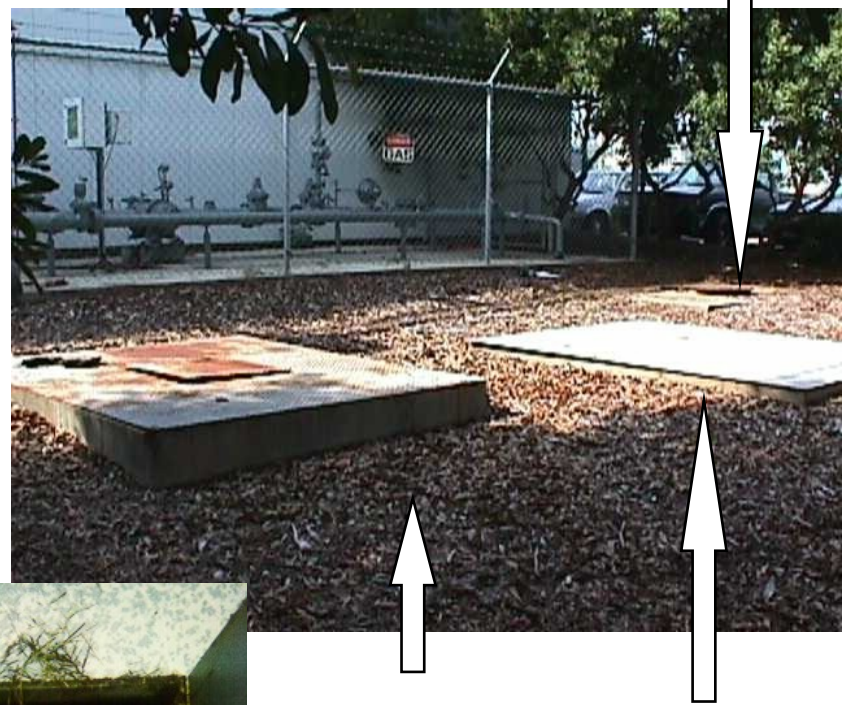

Note: Inspection from Outside of the Pits do not require a permit, only the use of the Multi-gas Monitor. The South Pit is not deep enough to require the Rescue Equipment when there is entry.

CONFINED SPACES SURVEY

Job Safety Analysis Worksheet

Columbia Mill/Energy Facility

Title of Job/Operation Backflow Pits (3) Date 9/30/96 & 10/19/98 No. _____

Position/Title(s) of Person(s) Who Do Job _____ Name of Employee Observed _____

_____ Analysis Made By Bernie Lee

Department Building Systems

Section Facilities Management Analysis Approved by Confined Space Committee

Sequence of Basic Job Steps	Potential Accidents or Hazards	Recommended Safe Job Procedures
1. Prepare to Enter	OE- Lifting pit cover	<50 Lbs; use proper lifting techniques
2. Enter pit	FB- 4'8" & 5'5" & 5' 4"	Need ladder; use proper climbing techniques
	SB- Falling cover	Lay flat; secure cover (open)
	E- Lack of O_2	Take air samples prior to entry
3. Conduct Work	E- Lack of O_2	Take continuous air samples during entry
	CW- Flood waters	Use LOTO prior to entry
	FS- Slip/Trip (water, pipes)	Wear work boots & be aware of pipes
	SA- Pipes/ceiling	Be aware of location; need portable lighting
4. Exiting	FB	"Fixed" ladder installed; use proper climbing
5. Close Up	FB/SB	Close cover; keep feet/hands away
	OE- Lifting pit cover	<50 Lbs; use proper lifting techniques

Struck By (SB)
Struck Against (SA)
Contacted By (CB)
Contact With (CW)

Caught On (CO)
Caught In (CI)
Caught Between (CBT)
Fall to Same Level (FS)

Fall to Below (FB)
Overexertion (OE)
Exposure (E)

COLUMBIA MILLS

Bldg 110708, 301 Gervais St

MAIN ELECTRIC ROOM PIT

Non-Permit
Confined Space

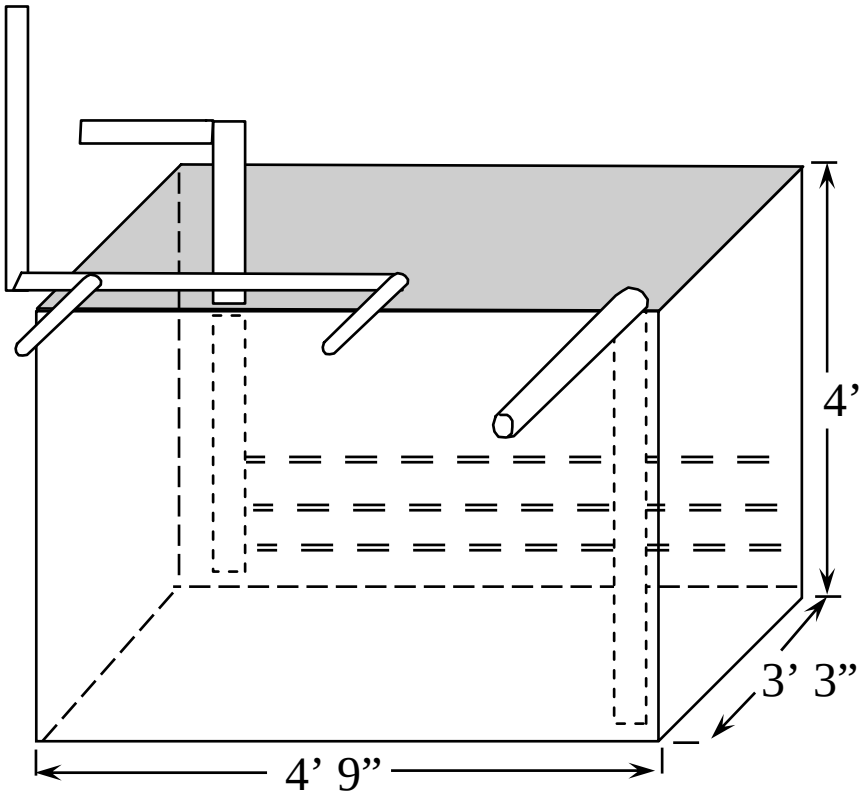

CONFINED SPACES SURVEY

Job Safety Analysis Worksheet

Title of Job/Operation Columbia Mill/Main Electrical Room - Pit Date 9/30/96 No. _____

Position/Title(s) of Person(s) Who Do Job _____ Name of Employee Observed _____

_____ Analysis Made By Bernie Lee

Department Building Systems

Section Facilities Management Analysis Approved by Confined Space Committee

Sequence of Basic Job Steps	Potential Accidents or Hazards	Recommended Safe Job Procedures
1. Enter	FB- 4’	Need a ladder
2. Conduct Work	CW- Hot Water/Steam	LOTO; PPE (gloves, long sleeves/apron, eye protection)
	SA- Pipes	Be aware of location
3. Exiting	FB	Need a ladder

Struck By (SB)
Struck Against (SA)
Contacted By (CB)
Contact With (CW)

Caught On (CO)
Caught In (CI)
Caught Between (CBT)
Fall to Same Level (FS)

Fall to Below (FB)
Overexertion (OE)
Exposure (E)

DATA CENTER

Bldg 113943, 4430 Broad River Road
BACKFLOW PREVENTER PIT
(Domestic Water)

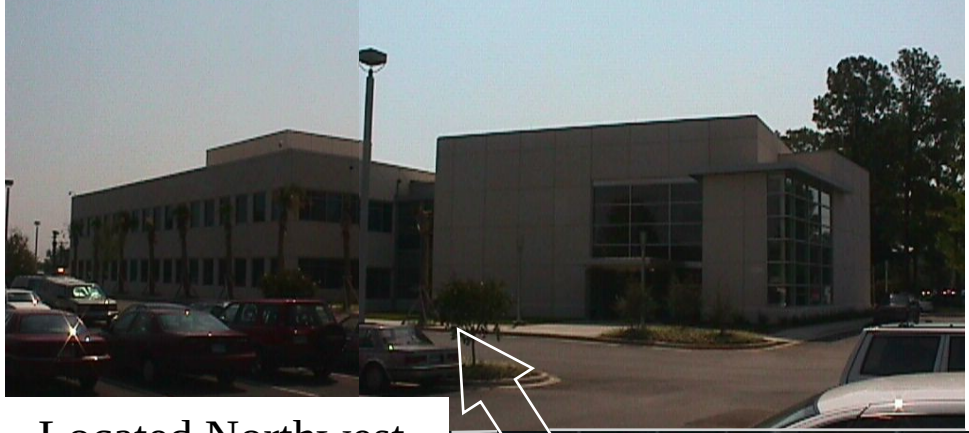

Located Northwest
Corner of Bldg

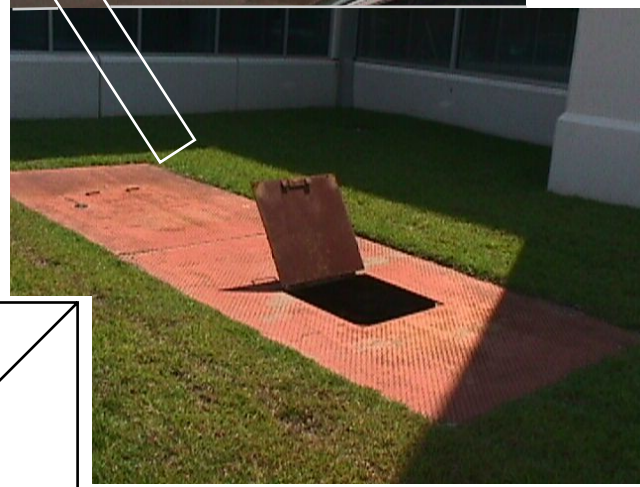

PERMIT REQUIRED
CONFINED SPACE

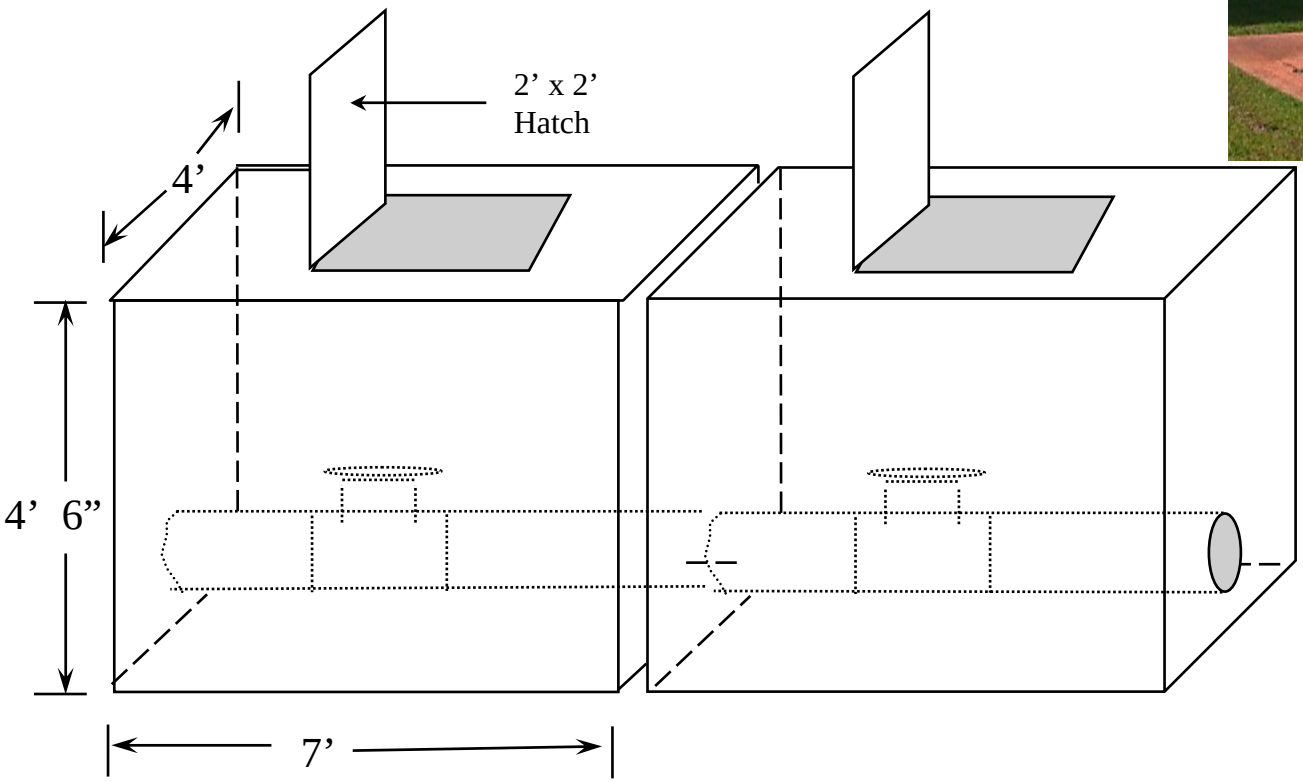

DATA CENTER

Bldg 113943, 4430 Broad River Road

BACKFLOW PREVENTER PIT

(Fire Sprinkler System)

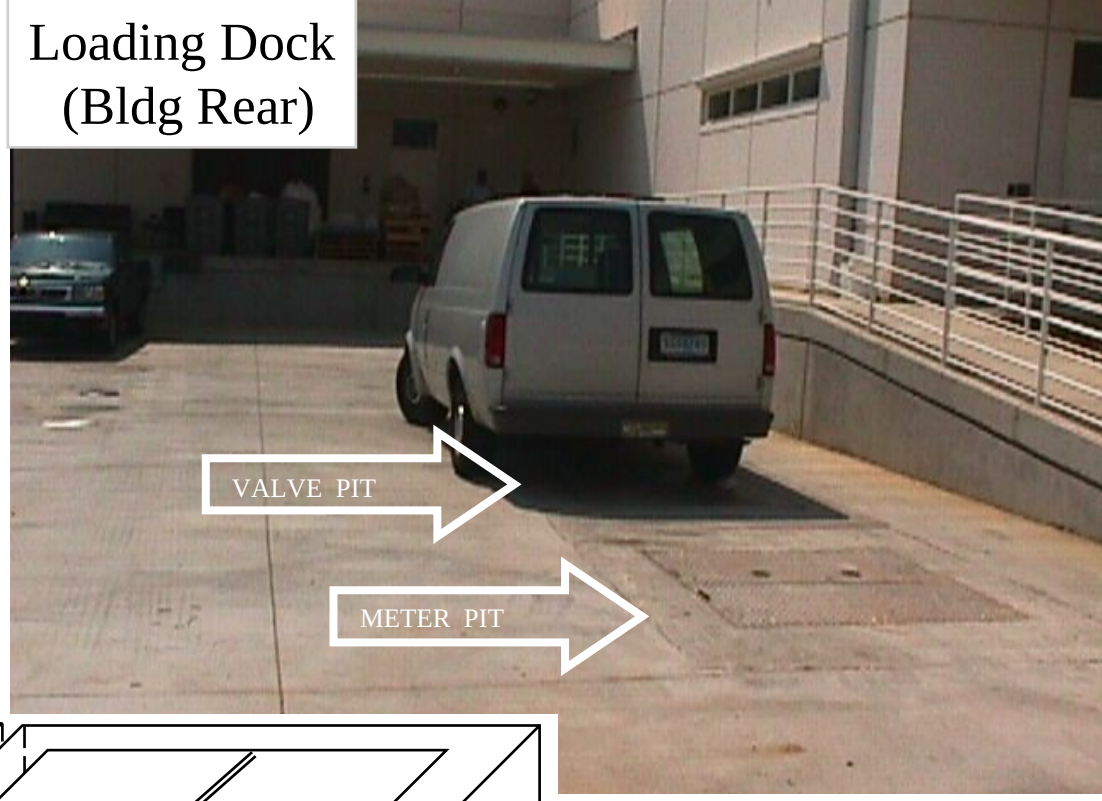

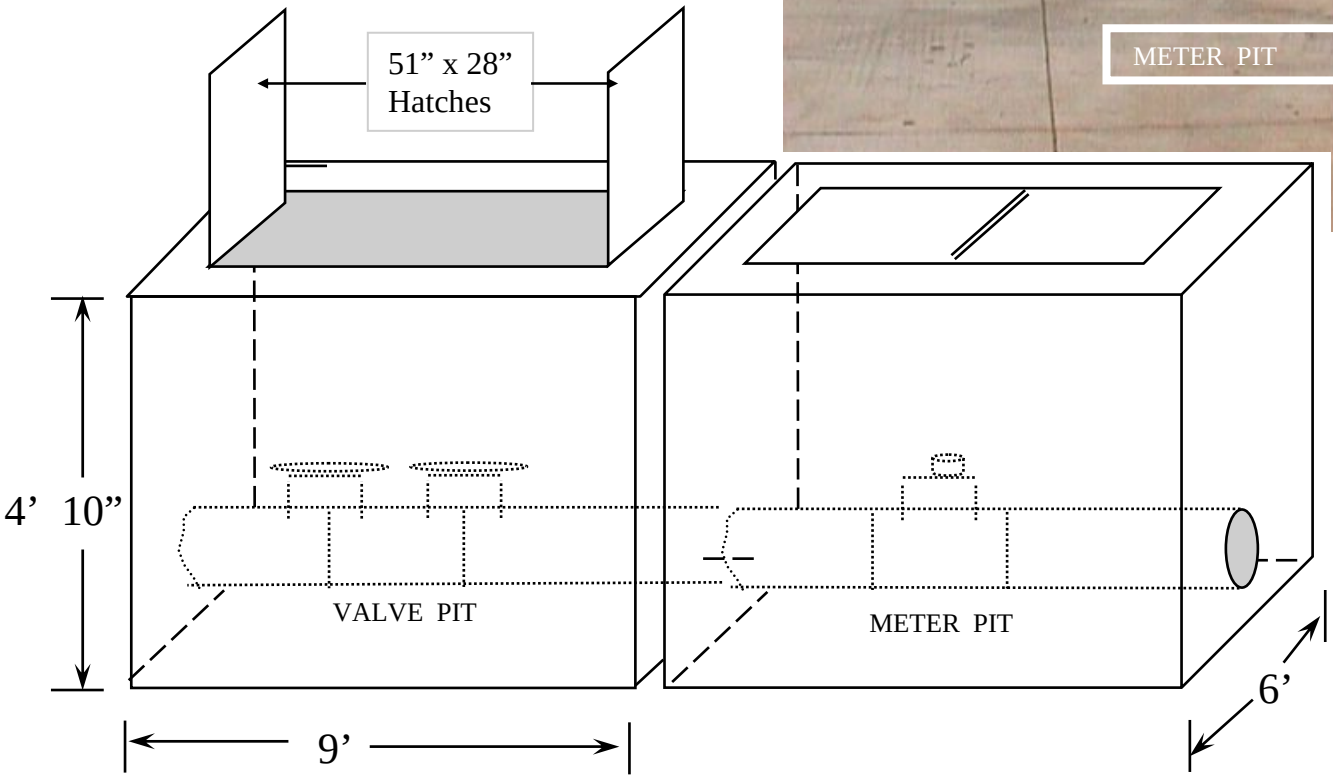

PERMIT REQUIRED CONFINED SPACE

DAVID BLDG

Bldg 100340, 1550 Gadsden St

BACKFLOW PREVENTER PIT

Located at Building's Northwest corner
(near intersection of Gadsden & Taylor Streets)

Recommend All Covers Be OPENED for entry

PERMIT REQUIRED CONFINED SPACE

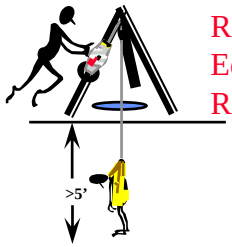

Rescue Equipment Required

If covers are closed, this is a Permit Required Confined Space

Otherwise this is a Non-permit Space

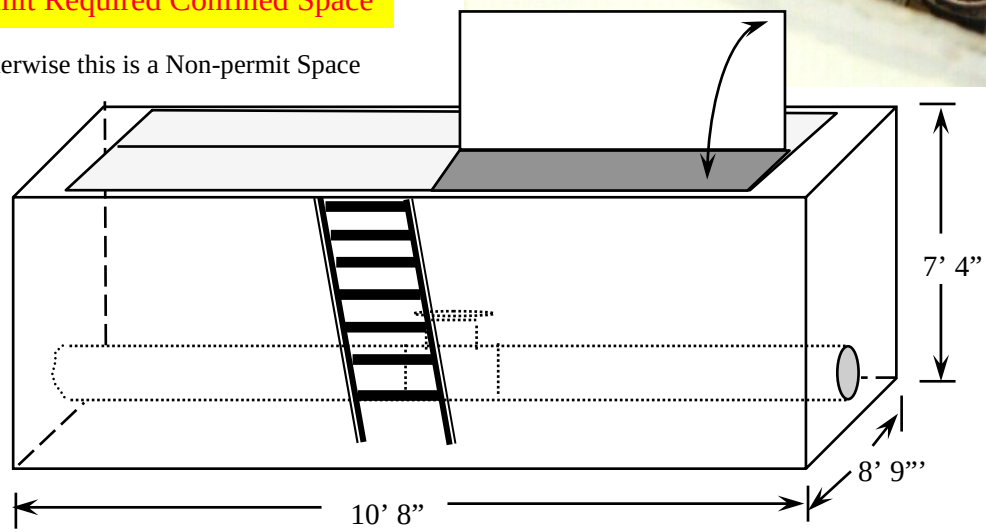

CONFINED SPACES SURVEY

Job Safety Analysis Worksheet

Title of Job/Operation Robert David Bldg Backflow Pit Date 3/96 & 9/30/96 No. _____

Position/Title(s) of Person(s) Who Do Job _____ Name of Employee Observed _____

_____ Analysis Made By Bernie Lee

Department Building Systems

Section Facilities Management Analysis Approved by Confined Space Committee

Sequence of Basic Job Steps	Potential Accidents or Hazards	Recommended Safe Job Procedures
1. Prepare to Enter	OE- Lifting pit cover(s)	<50 Lbs; use proper lifting techniques
2. Enter pit	FB- 7' 4"	Use proper climbing techniques
	SB- Falling cover	Secure opposing covers together (open)
	E- Lack of O_2	Open all 4 covers
3. Conduct Work	E- Lack of O_2	Keep covers open
	CW- Flood waters	Use LOTO prior to entry
	FS- Slip/Trip (water, pipes)	Wear work boots & be aware of pipes
	SA- Pipes	Be aware of location
4. Exiting	FB	"Fixed" ladder installed; use proper climbing
5. Close Up	FB/SB	Close cover; keep feet/hands away
	OE- Lifting pit cover(s)	<50 Lbs; use proper lifting techniques

Struck By (SB)
Struck Against (SA)
Contacted By (CB)
Contact With (CW)

Caught On (CO)
Caught In (CI)
Caught Between (CBT)
Fall to Same Level (FS)

Fall to Below (FB)
Overexertion (OE)
Exposure (E)

Dennis BLDG

Bldg. 100287, 1000 Assembly St

BACKFLOW PREVENTER PIT

Located at Building's Northwest corner
(near intersection of Assembly & Senate Streets)

NON-PERMIT CONFINED SPACE

Cover Must Be REMOVED for Entry or . . .

If only the hatch is open, this is a
Permit Required Confined Space

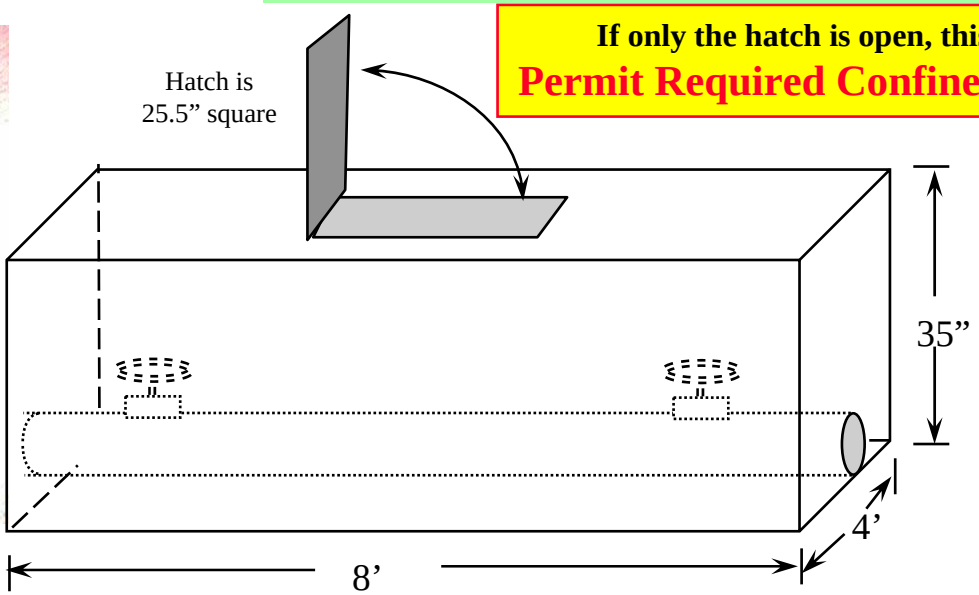

Dennis BLDG

Bldg. 100287, 1000 Assembly St

BACKFLOW PREVENTER PIT

Located on North side of the stairwell from the McEachern Parking Facility and between the Gressette and Statehouse Buildings

NON-PERMIT CONFINED SPACE

Recommend Cover Be REMOVED for entry

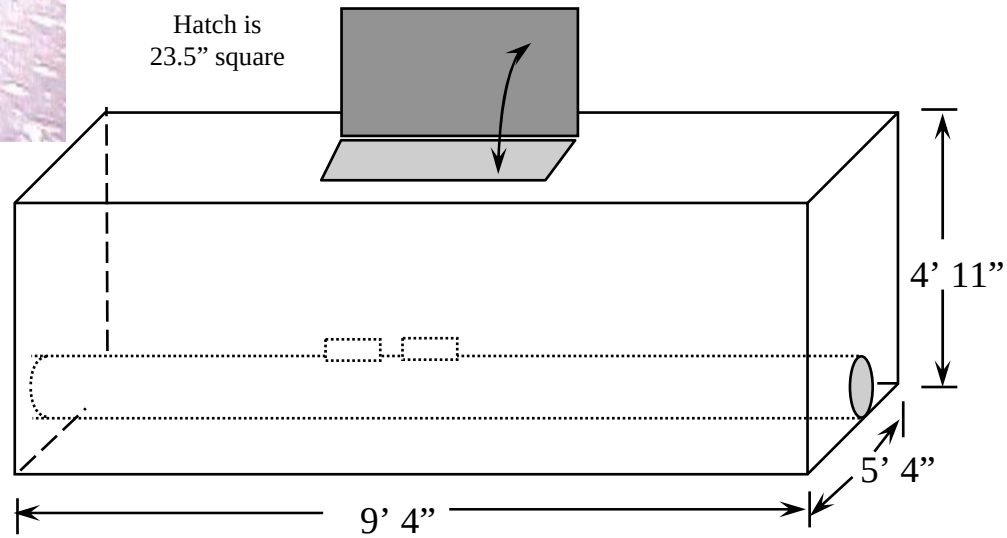

If only the hatch is open, this is a

Permit Required Confined Space

CONFINED SPACES SURVEY

Job Safety Analysis Worksheet

Title of Job/Operation **DENNIS Bldg- Backflow Preventor & Water Main Pits** Date 6/20/03 No. _____

Position/Title(s) of Person(s) Who Do Job _____ Name of Employee Observed _____

_____ Analysis Made By Bernie Lee

Department FM Bldg. Maintenance (Center)

Section Facilities Management Analysis Approved by Confined Space Committee

Sequence of Basic Job Steps	Potential Accidents or Hazards	Recommended Safe Job Procedures
1. Enter work space	FB- 3’	Install steps
	SB - Hatch is Restricted Entry	Permit Required unless Remove Entire
		cover (then is a Non-Permit Space); hard hat
	E - Hazardous Atmosphere	Use Multi-Gas Monitor to ensure safety
2. Conduct work	SA- Equipment	Wear gloves, hard hat & safety eyewear
	CW- Flood water	Use LOTO prior to entry; pump out excess
		water
	CW- Electrical	Use LOTO prior to entry
	FS- Slip/Trip	Wear work boots
	E - Hazardous Atmosphere	Use Multi-Gas Monitor for entire entry
3. Exiting	FB- 3’	Use steps

Struck By (SB)
Struck Against (SA)
Contacted By (CB)
Contact With (CW)

Caught On (CO)
Caught In (CI)
Caught Between (CBT)
Fall to Same Level (FS)

Fall to Below (FB)
Overexertion (OE)
Exposure (E)

DENNIS BLDG

Bldg 100287, 1000 Assembly St
CRAWL SPACES FOR BATHROOMS

Non-Permit Confined Spaces

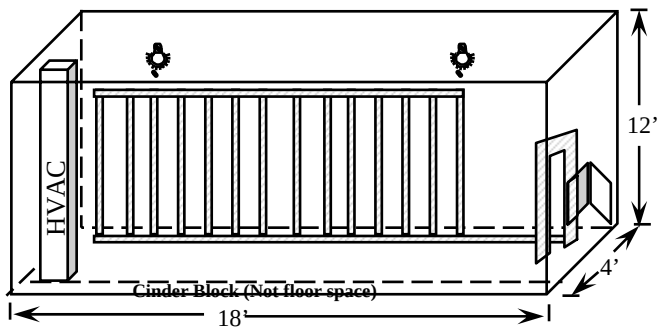

Access Panel Door- 23” x 23” metal, lockable; 24” off of floor

16 Locations- in hall corridor adjacent to Men’s Bathroom entrance and in ante-room of Ladies’ Bathrooms on all 7 floors plus two bathrooms adjacent to 1st floor auditorium

Crawl Space- 20” wide workspace (narrowest at entrance panel) by 18’ long by approx. 12’ tall; 2 lights provide good illumination; contains hot/cold/waste water pipes and HVAC ducting

NOTE: Entry/Exit obstructed by pipes (in shape of an inverted “U” 11” wide x 52” tall); pipes along floor and wall next to bathroom create many tripping obstacles

CONFINED SPACES SURVEY

Job Safety Analysis Worksheet

Title of Job/Operation Dennis Bldg- Bathroom Crawl Spaces (16) Date 9/26/96 No. _____

Position/Title(s) of Person(s) Who Do Job _____ Name of Employee Observed _____

_____ Analysis Made By Bernie Lee

Department Building Systems

Section Facilities Management Analysis Approved by Confined Space Committee

Sequence of Basic Job Steps	Potential Accidents or Hazards	Recommended Safe Job Procedures
1. Enter crawl space	E- Lack of O_2	Take air samples prior to entry
	SA- Pipes	Use caution
	FS- Slip/Trip through access door	Use caution; be aware of pipes on inside
2. Conduct Work	E- Lack of O_2	Take continuous air samples during entry
	CW- Flood water/waste lines	Use LOTO
	CW- Electrical	Use LOTO
	FS- Slip/Trip (water, pipes)	Wear work boots & be aware of equipment
	SA- Pipes/equipment	Be aware of location
3.	SA/FS- Slip/Trip through access door	Use caution; be aware of pipes; secure door
Exiting		

Struck By (SB)
Struck Against (SA)
Contacted By (CB)
Contact With (CW)

Caught On (CO)
Caught In (CI)
Caught Between (CBT)
Fall to Same Level (FS)

Fall to Below (FB)
Overexertion (OE)
Exposure (E)

ELEVATORS

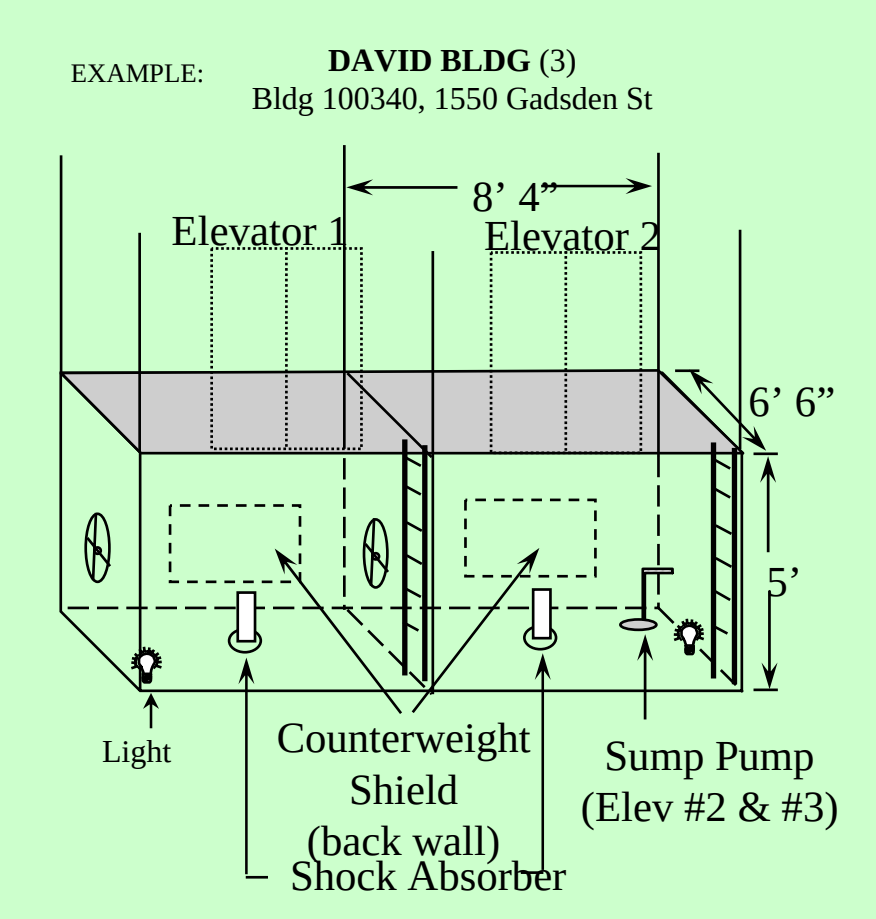

Elevator Hoistways
(Includes Shafts & Pits) are

Permit Required
Confined Spaces

that can be reclassified (to Permit Not Needed) in accordance with 29 CFR 1910.146 (c)(7) by applying LOTO

Ref: *Worldwide Job Safety Standards*, Otis Elevator Co., Apr 2005

NOTE: When work duration is more than 15 minutes in a hydraulic elevator pit, the elevator must first be securely landed on posts (hydraulic supports) before gaining access beneath the car; for 15 minutes or less, run the elevator to the highest point.

CONFINED SPACES SURVEY

Job Safety Analysis Worksheet

Title of Job/Operation Robert David Bldg- **Elevator Pits** (2) Date 10/96 & 8/06 No. _____

Position/Title(s) of Person(s) Who Do Job _____ Name of Employee Observed _____

_____ Analysis Made By Bernie Lee/Albert Shealy

Department Building Systems

Section Facilities Management Analysis Approved by Confined Space Committee

Sequence of Basic Job Steps	Potential Accidents or Hazards	Recommended Safe Job Procedures
1. Enter work space	FB- 5'	Fixed ladder installed; use proper climbing
		techniques
2. Conduct work	SA/SB- Equipment	Be aware of location; use caution
	E- Electrical, Hydraulic	Use LOTO prior to entry
	CW- Flood water	Exit if pump can not handle volume
	FS- Slip/Trip	Wear work boots & be aware of equipment
	FB-5'	Post observer/barrier
	CB/CI - Elevator car, pulleys, weight	Be aware of location; use caution
3. Exiting	FB	Use proper climbing techniques

Struck By (SB)
Struck Against (SA)
Contacted By (CB)
Contact With (CW)

Caught On (CO)
Caught In (CI)
Caught Between (CBT)
Fall to Same Level (FS)

Fall to Below (FB)
Overexertion (OE)
Exposure (E)

Elevator Shafts and Pits are **Permit Required Confined Spaces**

that can be reclassified (No Permit) in accordance with 1910.146 (c)(7) by applying LOTO

ELEVATOR HOISTWAYS
(Includes Shafts & Pits)

Permit Required Confined Spaces

that can be reclassified (No Permit) by applying LOTO

Building	Units	Equipment	Speed	Capacity	# Floors
Adjutant General	2/Pass	Hydraulic	120	2000	3
Agriculture Lab	1/Pass	Hydraulic	125/150	2000	2
Senate Street 1430	1/Pass	Geared	125	2000	6
Senate Street 1430	2/Pass	Geared	150	2000	6
Blatt	4/Pass	Geared	350	3000	8
Blatt	1/DW	Dumbwaiter	25	400	5
Columbia Mills Revenue	2/Pass	Hydraulic	125	2500	4
Columbia Mills Revenue	1/Freight	Hydraulic	100	5000	5
Columbia Mills Parking Garage	1/Pass	Hydraulic	150	2500	2
Columbia Mills Museum	1/Pass	Hydraulic	125	3500	3
Columbia Mills Museum	1/Svc	Hydraulic	100	10000	4
Columbia Mills Museum	1/Freight	Hydraulic	50/75	12000	3
Columbia Mills Museum	4/HL	Hand. Lift	25	500	2

ELEVATOR HOISTWAYS
(Includes Shafts & Pits)

Permit Required Confined Spaces

that can be reclassified (No Permit) by applying LOTO

Building	Units	Equipment	Speed	Capacity	# Floors
Commission for the Blind	2/Pass	Hydraulic	125/150	2000	2
David	3/Pass	Geared	350	2500	6
David	1/Pass	Hydraulic	125	1500	2
Dennis	4/Pass	Geared	350	3000	7
Dennis	1/Svcs	Geared	300	3000	7
Harden St/ DSS	2/Pass	Hydraulic	135	2500	3
North Tower/ DSS	1/Pass	Geared	250	3000	7
North Tower/ DSS	2/Pass	Geared	250	3000	6
Five Points	2/Pass	Geared	350	3000	6
Hayne (DHEC LAB)	1/Pass	Hydraulic	125/150	2500	4
Hayne (DHEC LAB)	1/Frt	Geared	200	10000	4
Lace House	1/Pass	Geared	50	500	3
Lace House	1/DW	Dumbwaiter	50	500	2
Mills/Jarrett	3/Pass	Hydraulic	125	2500	4
Assembly Street Parking Deck	1/Pass	Hydraulic	75	3500	8

ELEVATOR HOISTWAYS
(Includes Shafts & Pits)

Permit Required Confined Spaces

that can be reclassified (No Permit) by applying LOTO

Building	Units	Equipment	Speed	Capacity	# Floors
Gressette-Collins	2/Pass	Hydraulic	150	2500	3
OHR Senate Street	1/Pass	Hydraulic	95	2100	2
Sims/Aycock	1/Pass	Geared	200	2500	4
Sims/Aycock	1/Pass	Geared	200	25000	4
Sims/Aycock	1/Svcs	Hydraulic	105	4000	3
Sims/Aycock	2/Pass	Hydraulic	200	3000	4
State Library	2/Pass	Hydraulic	150	1500	6
State Library	1/Pass	Hydraulic	100	1500	2
Sumter Street	1/Pass	Hydraulic	125	2500	3
Supreme Court	1/Pass	Hydraulic	150/200	2000	4
Supreme Court	1/Pass	Hydraulic	150/200	1500	4
Calhoun	2/Pass	Geared	350	2000	6
Calhoun	1/Svcs	Geared	200	4000	6

ELEVATOR HOISTWAYS
(Includes Shafts & Pits)

Permit Required Confined Spaces

that can be reclassified (No Permit) by applying LOTO

Building	Units	Equipment	Speed	Capacity	# Floors
Gressette	3/Pass	Geared	350	3000	9
Rutledge	3/Pass	Gearless	500	3000	13
Rutledge	1/Svcs	Gearless	500	3000	14
Data Center	1/Pass	Hydraulic	100	3500	2
Data Center	1/Pass	Hydraulic	100	4500	2
Archives & History	2/Pass	Hydraulic	150	3500	3
Archives & History	1/Svcs	Hydraulic	100	4000	3
Wade Hampton	2/Pass	Gearless	500	2500	7
Wade Hampton	1/Svcs	Gearless	350	2500	7
Governor's Mansion	1/Pass	Hydraulic	100	2100	3
State Capitol	1/Pass	Hydraulic	150	4000	3
State Capitol	1/Pass	Hydraulic	150	400	4
State Capitol	1/Pass	Hydraulic	150	3500	2
State Capitol	1/Pass	Hydraulic	150	300	4
State Capitol	2/ESC	Chain Drive	90	8000	2
State Capitol	1H/L	Screw	10	750	2

CONTINUED

see

Pictorial Directory & Hazard Analysis of

CONFINED SPACES

in SC B&CB Buildings

(in Alphabetical Order **F - Z** by Building Name / System)